156

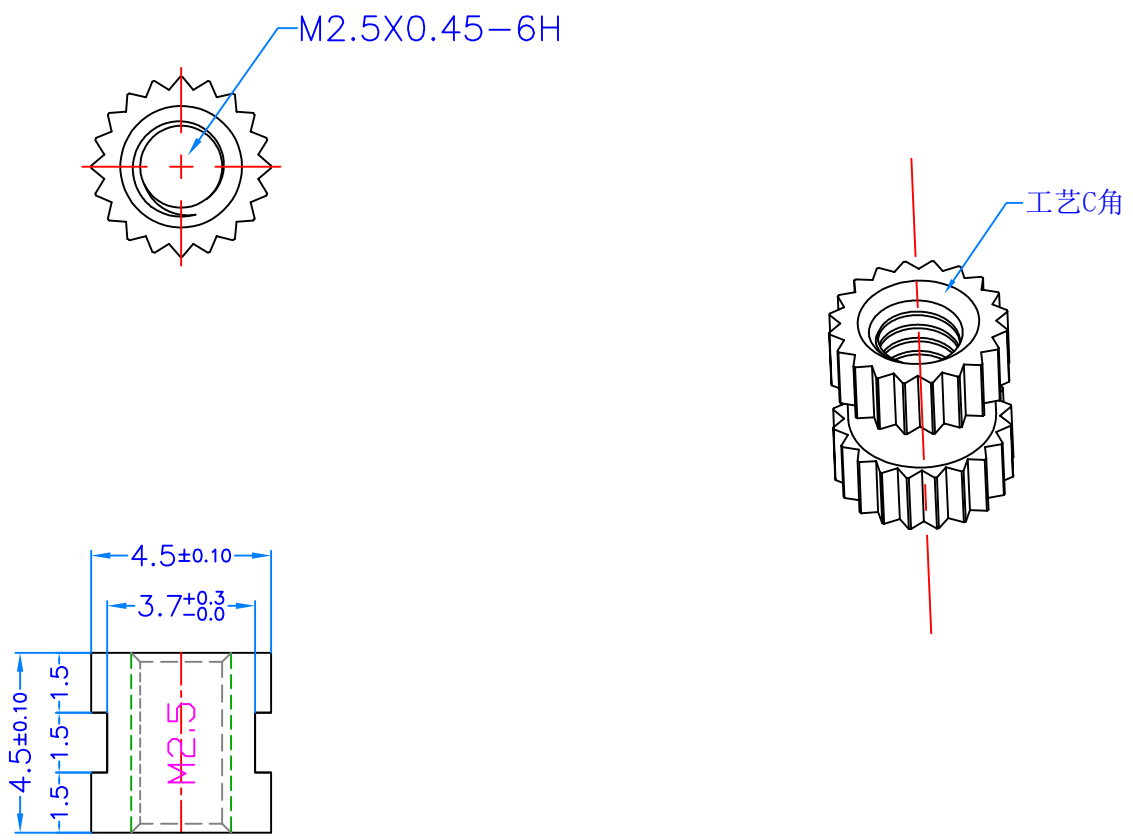

NOTE:

1. BREAK ALL SHARP EDGES
2. DEBURR ALL HOLES
3. STRAIGHT KNURLING GB/T6403.3-2008

Hansin瀚兴

Precision Engineering (Shanghai) Co., Ltd

PART NAME	INSERT M2.5x4.5mm-INT THREAD 4.5mmLG		
PART NUMBER	HSSN156		
MATERIAL	SUS303		
DWG NO.	HSM25008	REV. NO	A
TOOLING NO.			
DATE	08.APR.2023		
DATE	08.APR.2023		
DATE	08.APR.2023		
SCALE 1:1	SHEET 01 OF 01		

UNIT = MM	MANUFACTURER	HANSIN	
ANGLES = ±0°30'			
0.000 = ±0.005	DRAWN BY	Felix Mao	
0.00 = ±0.1	CHECKED BY	Guochun Chu	
0.0 = ±0.2	APPROVED BY	CHEW	
0 = ±0.5 GENERAL TOLERANCE	PROJECTION		

SIZE-A4